REVISION HISTORY				
ZONE	REV	DESCRIPTION	DATE	APPROVED

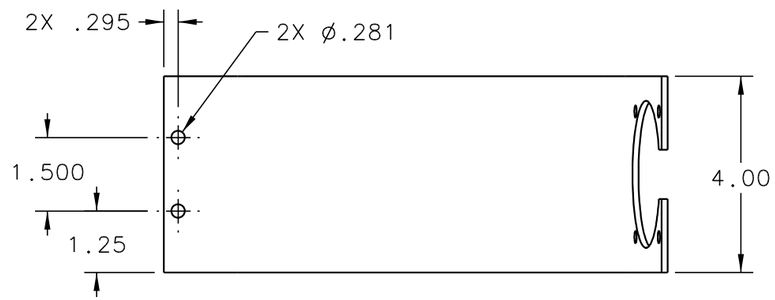

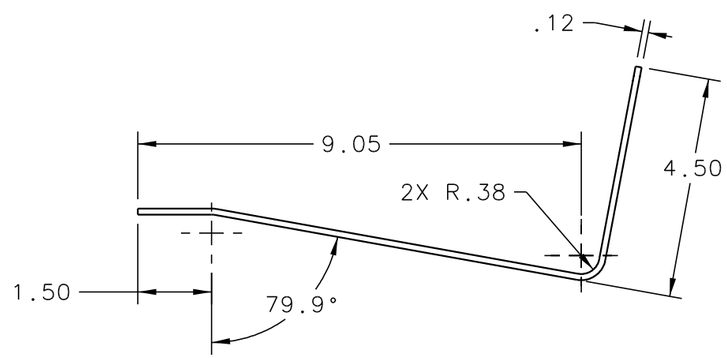

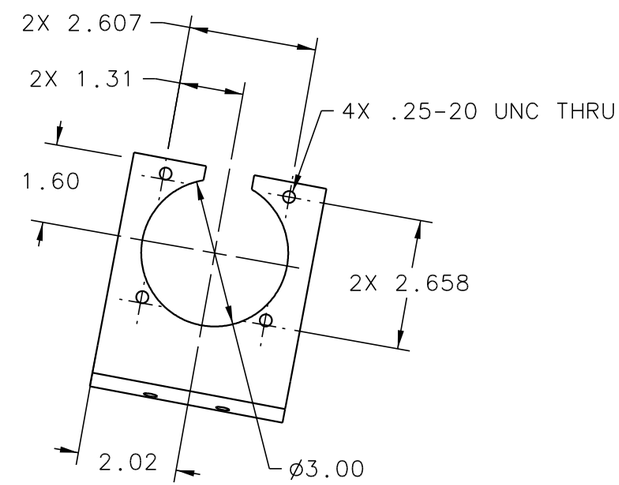

DOCUMENT CONTROL STAMP

MATERIAL
STEEL

FINISH MACHINED SURFACES 125 UNLESS OTHERWISE NOTED
DEBURR & BREAK ALL SHARP EDGES

DO NOT SCALE DRAWING

DIM & TOL PER ASME Y14.5 .
UNLESS OTHERWISE SPECIFIED
DIMENSIONS ARE IN INCHES
TOLERANCES ARE:

FRACTIONS	DECIMAL	ANGLES
± N/A	.X ± .1	± .50°
	.XX ± .01	
	.XXX ± .005	

THIRD ANGLE PROJECTION

TRACKING NO.
N/A

APPROVALS	DATE
DRAWN C L HUTTON	12JUN12
CHECKED	
APPROVED	
APPROVED	

United States Department of Energy

Jefferson Lab
Thomas Jefferson National Accelerator Facility

Newport News Virginia

HALL D - GLUEX
TEST SETUP
TIME OF FLIGHT
MINI TOF SINGLE BRACKET LONG2

SIZE C | DWG. NO. D00000-13-05-2017 | REV. –

SCALE 1/2 | USED ON ASSY NO. D00000-13-05-0000 | SHEET 1 OF 1