REVISION HISTORY				
ZONE	REV	DESCRIPTION	DATE	APPROVED

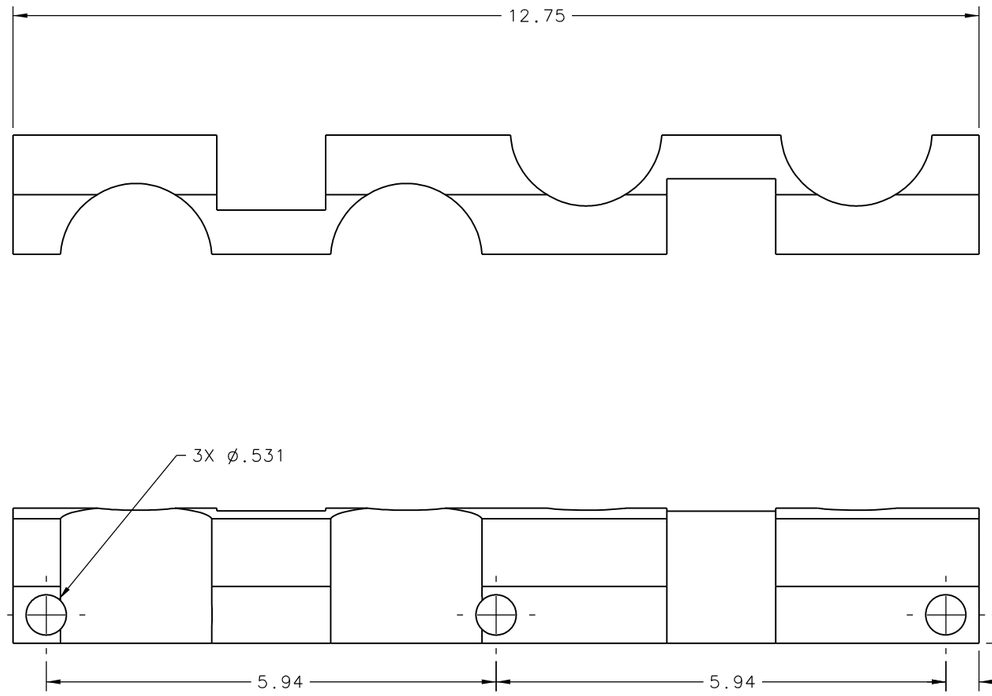

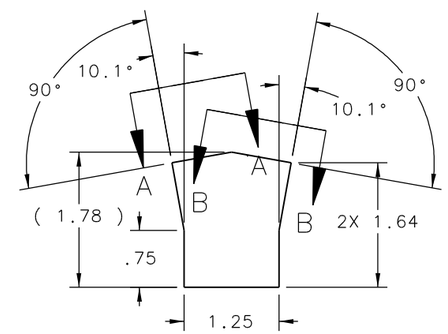

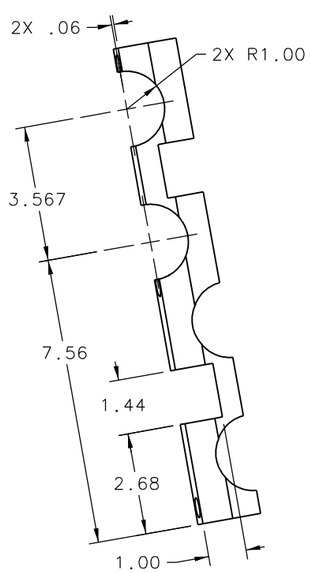

VIEW A-A

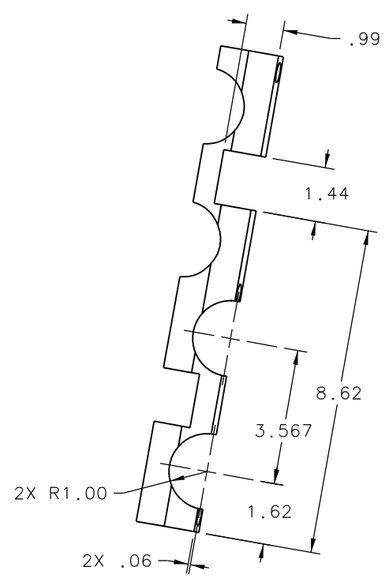

VIEW B-B

DOCUMENT CONTROL STAMP	DIM & TOL PER ASME Y14.5. UNLESS OTHERWISE SPECIFIED DIMENSIONS ARE IN INCHES TOLERANCES ARE: FRACTIONS ± N/A; DECIMAL .X ±.1, .XX ±.01, .XXX ±.005; ANGLES ± .50°	TRACKING NO. N/A	United States Department of Energy — Jefferson Lab, Thomas Jefferson National Accelerator Facility — Newport News Virginia
MATERIAL STEEL	THIRD ANGLE PROJECTION	APPROVALS / DATE	HALL D- GLUEX TEST SETUP TIME OF FLIGHT MINI TOF LIGHT GUIDE CLAMP2
FINISH MACHINED SURFACES 125 UNLESS OTHERWISE NOTED; DEBURR & BREAK ALL SHARP EDGES		DRAWN C L HUTTON 13JUN12	
		CHECKED	
		APPROVED	SIZE D; DWG. NO. D00000-13-05-2015; REV. –
DO NOT SCALE DRAWING		APPROVED	SCALE 1:1; USED ON ASSY NO. D00000-13-05-1001; SHEET 1 OF 1