| REVISION HISTORY | | | | |
|---|---|---|---|---|
| ZONE | REV | DESCRIPTION | DATE | APPROVED |

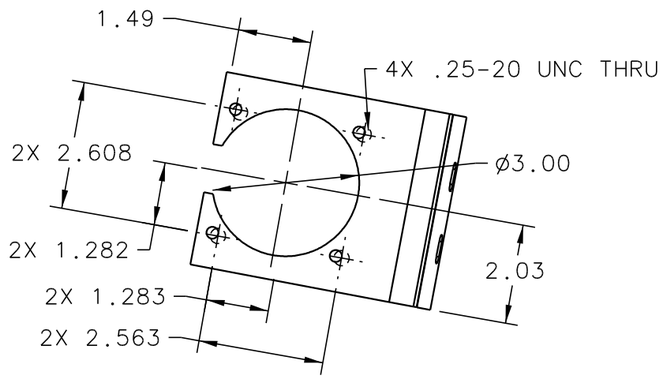


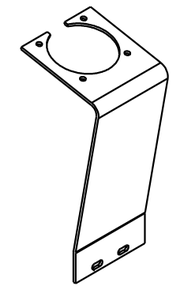

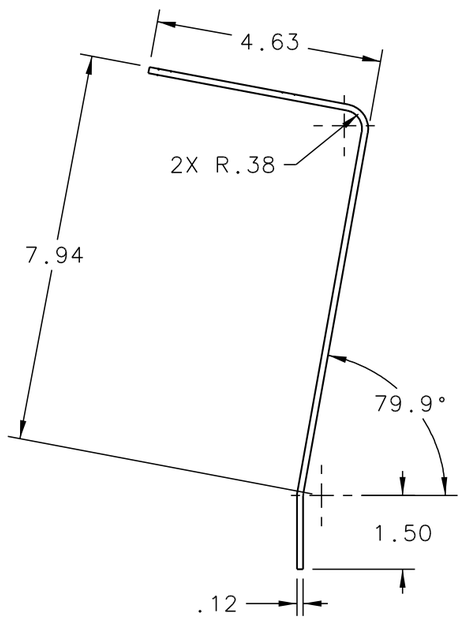


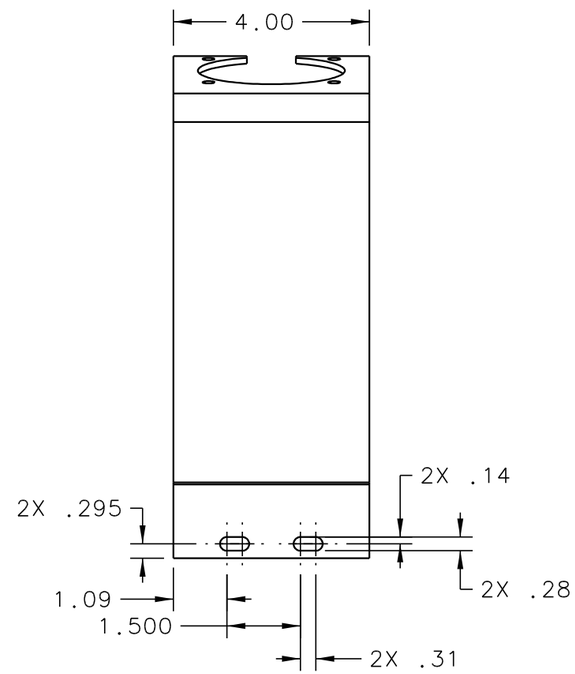


| | | | |
|---|---|---|---|
| DOCUMENT CONTROL STAMP | DIM & TOL PER ASME Y14.5. UNLESS OTHERWISE SPECIFIED DIMENSIONS ARE IN INCHES TOLERANCES ARE: FRACTIONS ± N/A; DECIMAL .X ±.1, .XX ±.01, .XXX ±.005; ANGLES ± .50° | TRACKING NO. N/A | United States Department of Energy — Jefferson Lab, Thomas Jefferson National Accelerator Facility — Newport News Virginia |
| MATERIAL STEEL | THIRD ANGLE PROJECTION | APPROVALS / DATE | HALL D - GLUEX TEST SETUP TIME OF FLIGHT MINI TOF SINGLE BRACKET LONG |
| FINISH MACHINED SURFACES 125 UNLESS OTHERWISE NOTED; DEBURR & BREAK ALL SHARP EDGES | | DRAWN C L HUTTON 13JUN12 | |
| DO NOT SCALE DRAWING | | CHECKED | SIZE C; DWG. NO. D00000-13-05-2008; REV. – |
| | | APPROVED | SCALE 1/2; USED ON ASSY NO. D00000-13-05-0000; SHEET 1 OF 1 |
| | | APPROVED | |