REVISION HISTORY				
ZONE	REV	DESCRIPTION	DATE	APPROVED

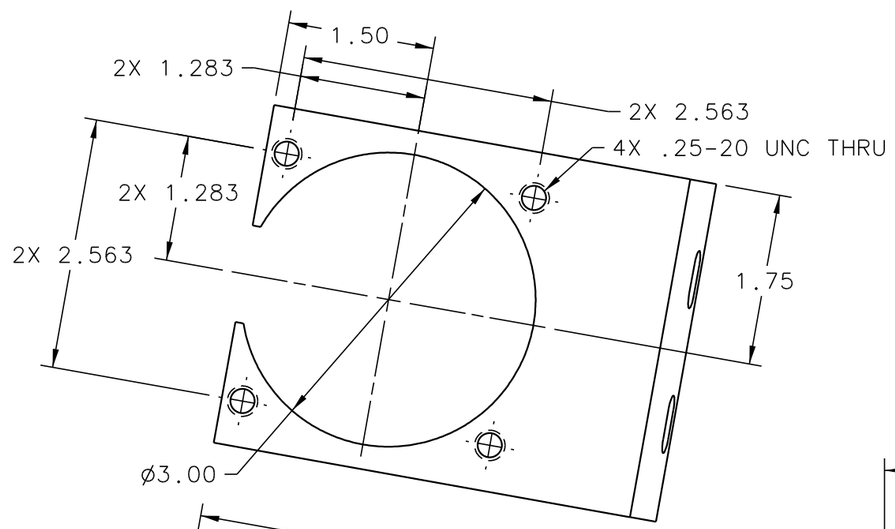

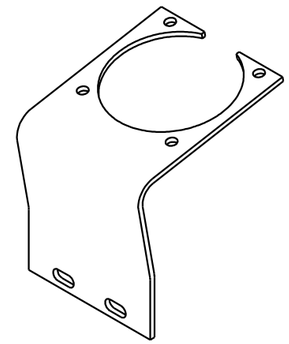

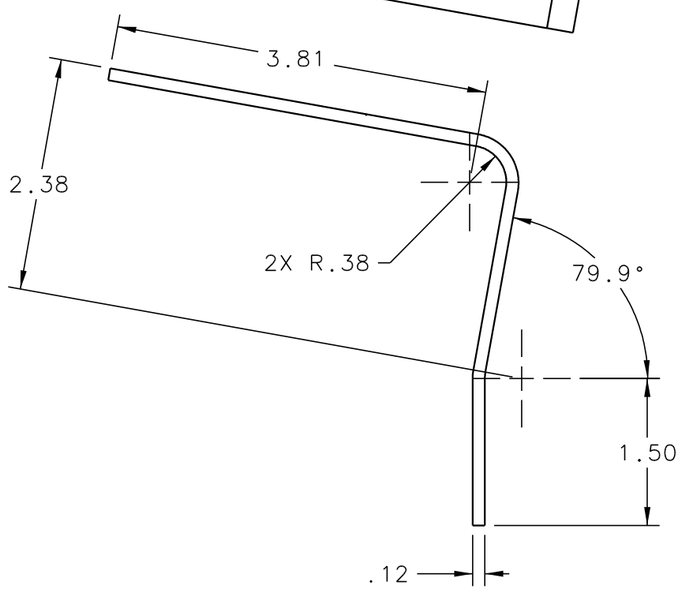

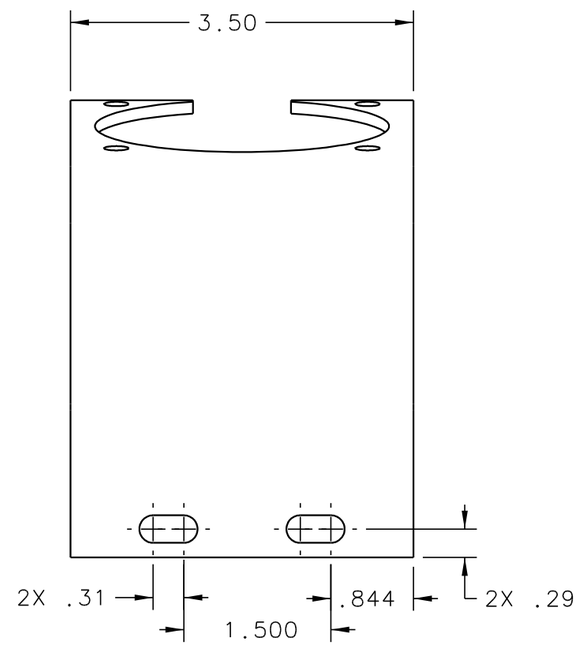

DOCUMENT CONTROL STAMP	DIM & TOL PER ASME Y14.5. UNLESS OTHERWISE SPECIFIED DIMENSIONS ARE IN INCHES TOLERANCES ARE: FRACTIONS ± N/A; DECIMAL .X ±.1, .XX ±.01, .XXX ±.005; ANGLES ± .50°	TRACKING NO. N/A	United States Department of Energy — Jefferson Lab, Thomas Jefferson National Accelerator Facility — Newport News Virginia
MATERIAL STEEL	THIRD ANGLE PROJECTION	APPROVALS / DATE	HALL D - GLUEX TEST SETUP TIME OF FLIGHT MINI TOF SINGLE BRACKET SHORT
FINISH MACHINED SURFACES 125 UNLESS OTHERWISE NOTED		DRAWN C L HUTTON 24MAY12	
DEBURR & BREAK ALL SHARP EDGES		CHECKED	SIZE C — DWG. NO. D00000-13-05-2007 — REV. –
DO NOT SCALE DRAWING		APPROVED	SCALE 1:1 — USED ON ASSY NO. D00000-13-05-0000 — SHEET 1 OF 1
		APPROVED	