REVISION HISTORY				
ZONE	REV	DESCRIPTION	DATE	APPROVED

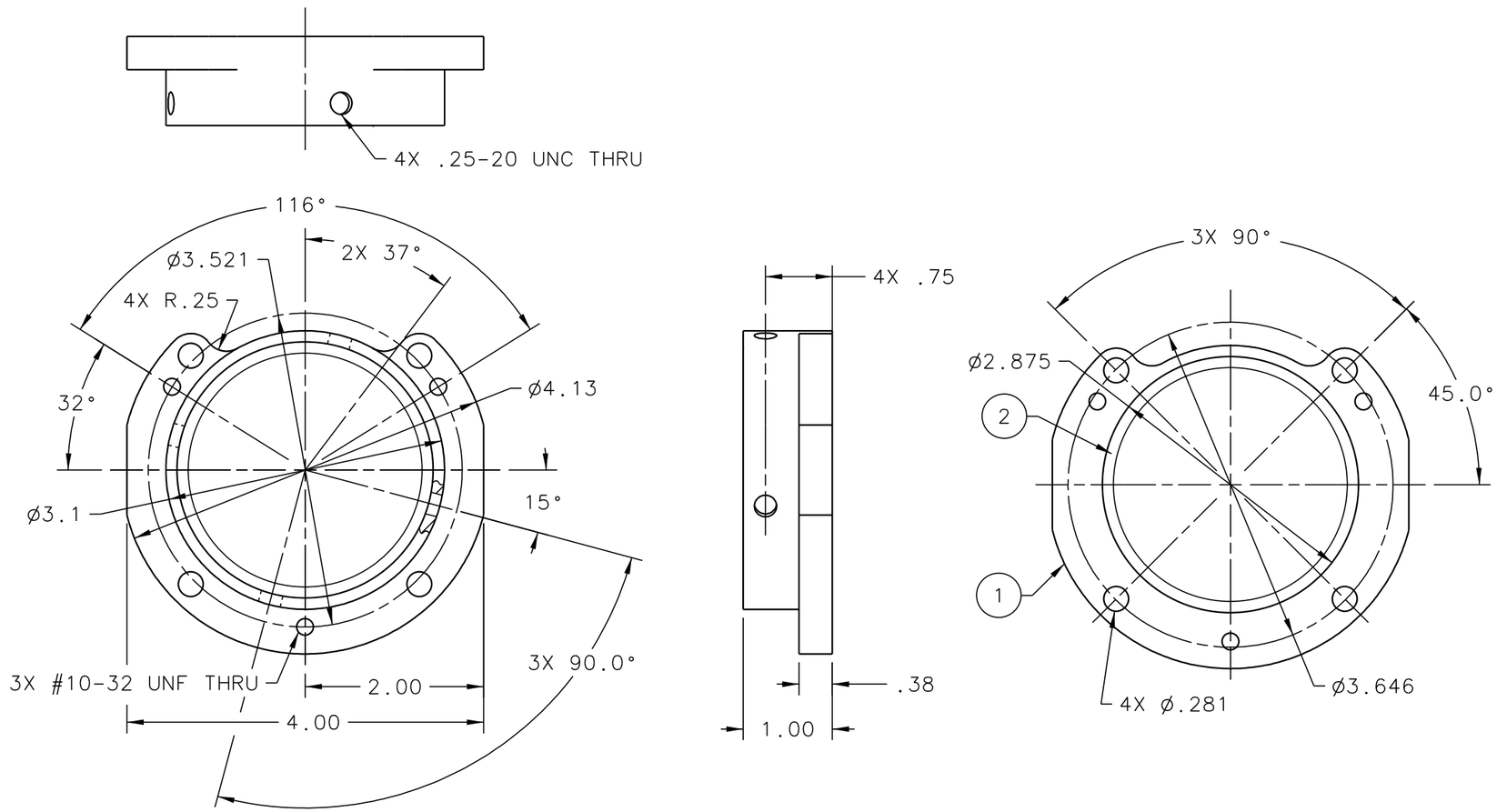

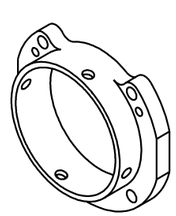

QTY REQD	ITEM NO.	PART OR IDENTIFYING NO.	NOMENCLATURE OR DESCRIPTION	MATERIAL SPECIFICATION	NOTES
AR	2		FOAM TAPE, .13 THK		
1	1		ROUND BAR	STEEL	

PARTS LIST

DOCUMENT CONTROL STAMP

MATERIAL
SEE PARTS LIST

FINISH
MACHINED SURFACES 125 UNLESS OTHERWISE NOTED
DEBURR & BREAK ALL SHARP EDGES

DO NOT SCALE DRAWING

DIM & TOL PER ASME Y14.5 .
UNLESS OTHERWISE SPECIFIED
DIMENSIONS ARE IN INCHES
TOLERANCES ARE:
FRACTIONS ± N/A
DECIMAL .X ± .1 .XX ± .01 .XXX ± .005
ANGLES ± .50°

THIRD ANGLE PROJECTION

TRACKING NO.
N/A

APPROVALS	DATE
DRAWN C L HUTTON	18MAY12
CHECKED	
APPROVED	
APPROVED	

United States Department of Energy
Jefferson Lab
Thomas Jefferson National Accelerator Facility
Newport News Virginia

HALL D - GLUEX
TEST SETUP
TIME OF FLIGHT
MINI TOF SHIELD HOLDER

SIZE C | DWG. NO. D00000-13-05-2005 | REV. -

SCALE 1:1 | USED ON ASSY NO. D00000-13-05-0000 | SHEET 1 OF 1