| REVISION HISTORY | | | | |
|---|---|---|---|---|
| ZONE | REV | DESCRIPTION | DATE | APPROVED |

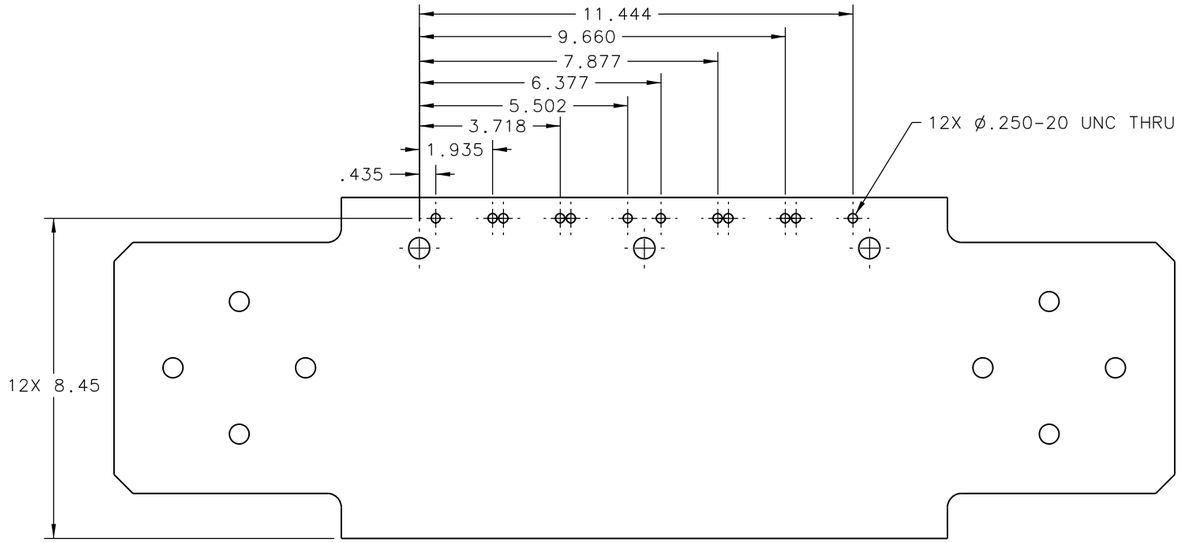


VIEW A-A

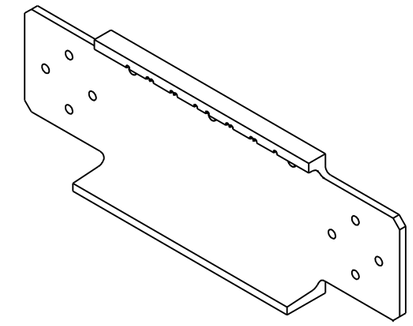

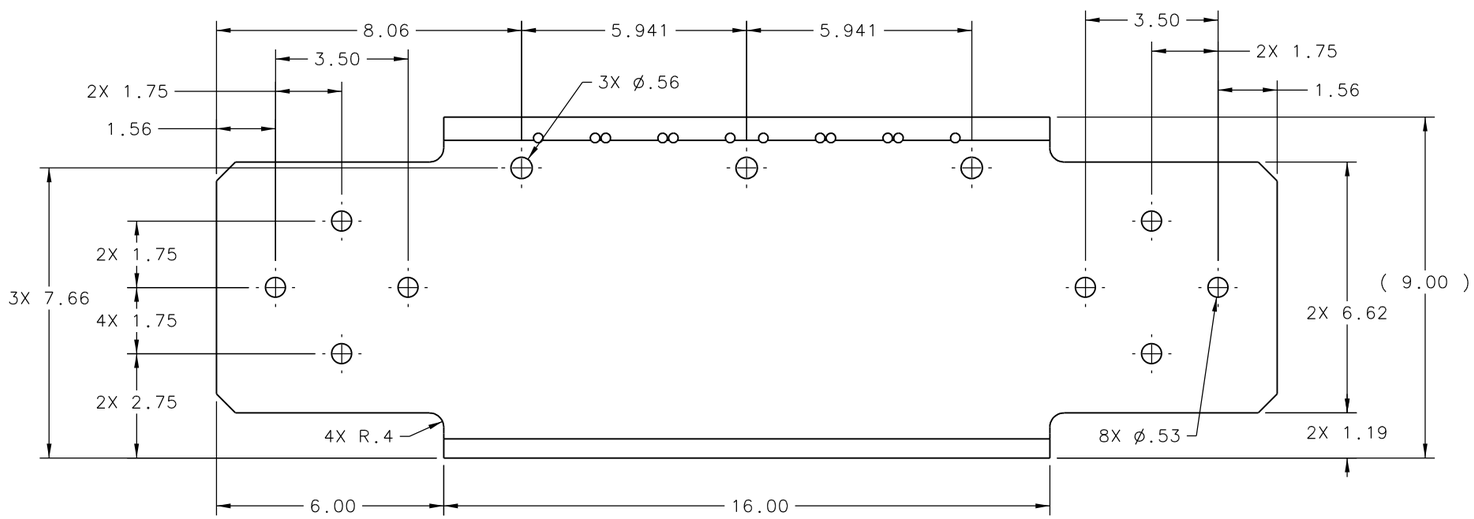


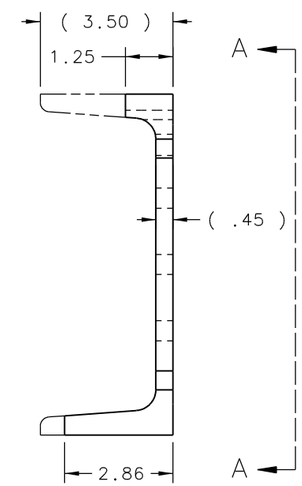


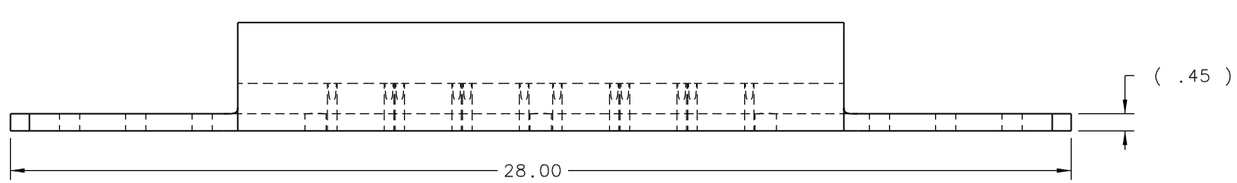


| QTY REQD | ITEM NO. | PART OR IDENTIFYING NO. | NOMENCLATURE OR DESCRIPTION | MATERIAL SPECIFICATION | NOTES |
|---|---|---|---|---|---|
| 1 | 1 | | CHANNEL, MC9 X 25.4 | STEEL | |

PARTS LIST

DOCUMENT CONTROL STAMP

MATERIAL
SEE PARTS LIST

FINISH MACHINED SURFACES 125 UNLESS OTHERWISE NOTED
DEBURR & BREAK ALL SHARP EDGES

DO NOT SCALE DRAWING

DIM & TOL PER ASME Y14.5 - UNLESS OTHERWISE SPECIFIED
DIMENSIONS ARE IN INCHES
TOLERANCES ARE:

| FRACTIONS | DECIMAL | ANGLES |
|---|---|---|
| ± N/A | .X ± .1 | ± .50° |
| | .XX ± .01 | |
| | .XXX ± .005 | |

THIRD ANGLE PROJECTION

TRACKING NO.
N/A

| APPROVALS | DATE |
|---|---|
| DRAWN C L HUTTON | 17MAY12 |
| CHECKED | |
| APPROVED | |
| APPROVED | |

United States Department of Energy
Jefferson Lab
Thomas Jefferson National Accelerator Facility
Newport News Virginia

HALL D - GLUEX
TEST SETUP
TIME OF FLIGHT
MINI TOF SUPPORT CHANNEL 2

SIZE D | DWG. NO. D00000-13-05-2001 | REV. –

SCALE 1/2 | USED ON ASSY NO. D00000-13-05-0000 | SHEET 1 OF 1