REVISION HISTORY				
ZONE	REV	DESCRIPTION	DATE	APPROVED

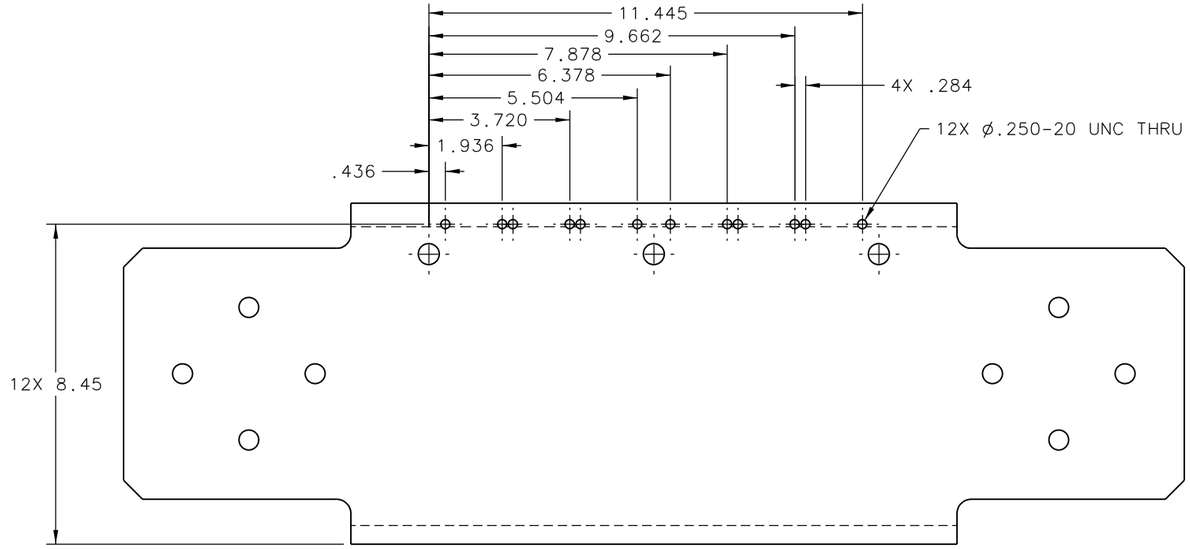

VIEW A-A

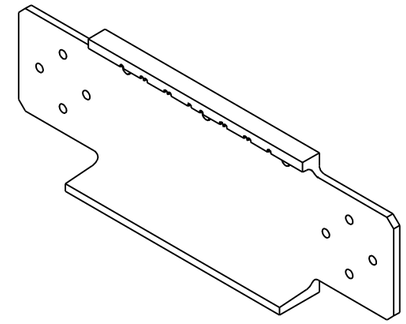

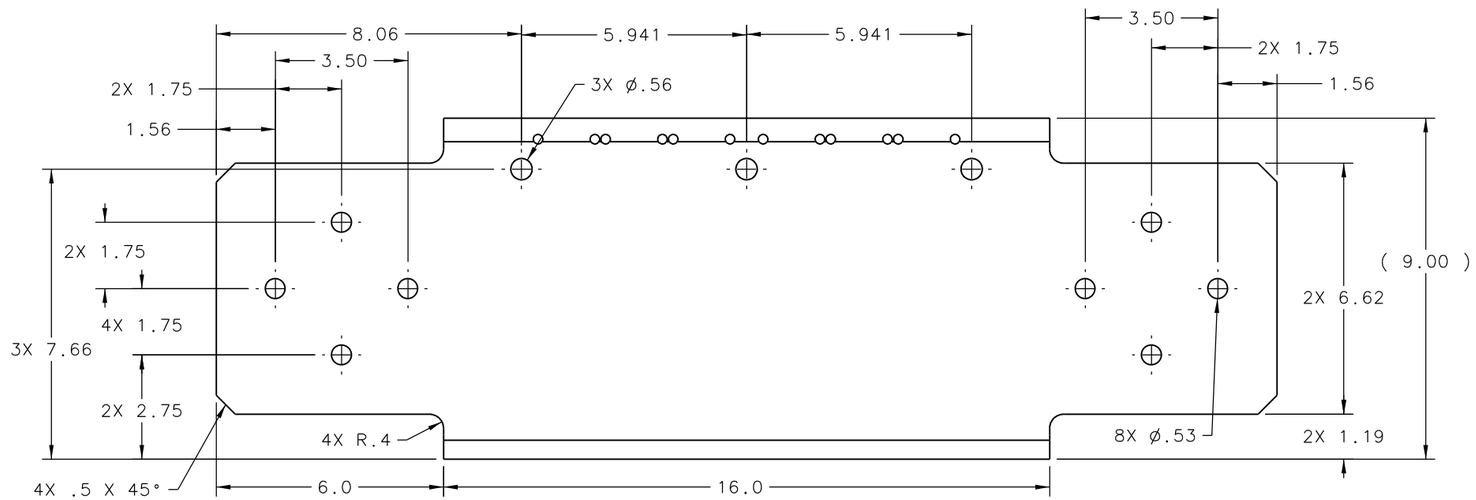

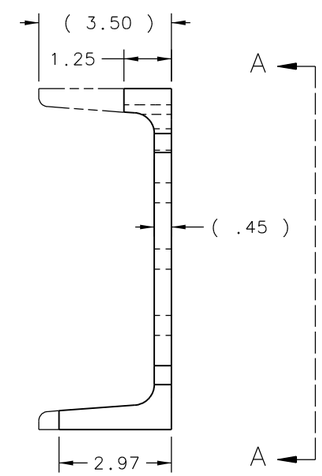

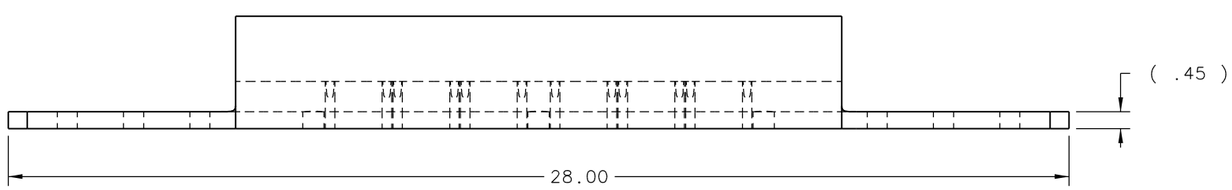

QTY REQD	ITEM NO.	PART OR IDENTIFYING NO.	NOMENCLATURE OR DESCRIPTION	MATERIAL SPECIFICATION	NOTES
1	1		CHANNEL, MC9 X 25.4	STEEL	

PARTS LIST

DOCUMENT CONTROL STAMP

MATERIAL
SEE PARTS LIST

FINISH MACHINED SURFACES 125 UNLESS OTHERWISE NOTED
DEBURR & BREAK ALL SHARP EDGES

DO NOT SCALE DRAWING

DIM & TOL PER ASME Y14.5.
UNLESS OTHERWISE SPECIFIED
DIMENSIONS ARE IN INCHES
TOLERANCES ARE:
FRACTIONS ± N/A
DECIMAL .X ±.1 .XX ±.01 .XXX ±.005
ANGLES ± .50°

THIRD ANGLE PROJECTION

TRACKING NO. N/A

APPROVALS	DATE
DRAWN C L HUTTON	17MAY12
CHECKED	
APPROVED	
APPROVED	

United States Department of Energy

Jefferson Lab
Thomas Jefferson National Accelerator Facility

Newport News Virginia

HALL D - GLUEX
TEST SETUP
TIME OF FLIGHT
MINI TOF SUPPORT CHANNEL 1

SIZE D DWG. NO. D00000-13-05-2000 REV. –

SCALE 1/2 USED ON ASSY NO. D00000-13-05-0000 SHEET 1 OF 1