REVISION HISTORY				
ZONE	REV	DESCRIPTION	DATE	APPROVED

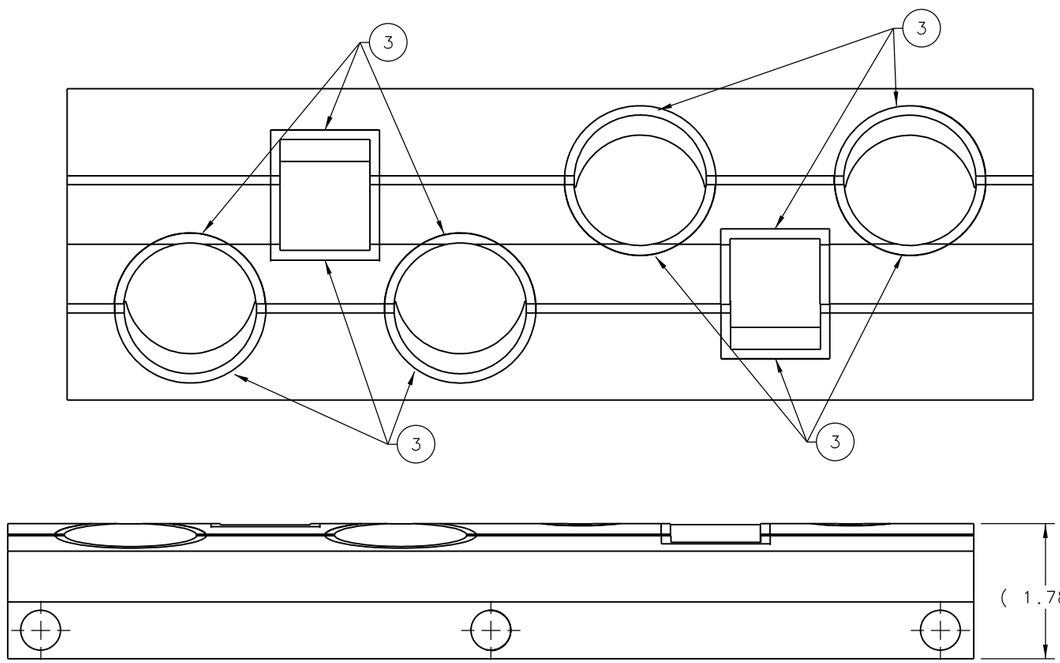

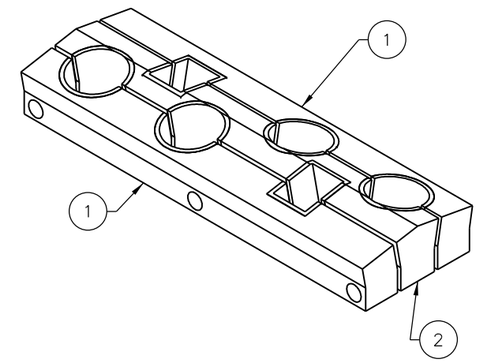

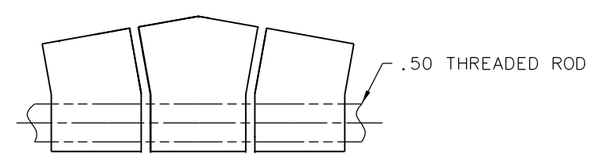

PARTS LIST

QTY REQD	ITEM NO.	PART OR IDENTIFYING NO.	NOMENCLATURE OR DESCRIPTION	MATERIAL SPECIFICATION	NOTES
AR	3		FOAM. .13 THK		
1	2	D00000-13-05-2015	MINI TOF LIGHT GUIDE CLAMP 2		
2	1	D00000-13-05-0-2014	MINI TOF LIGHT GUIDE CLAMP 1		

DOCUMENT CONTROL STAMP

MATERIAL
SEE PARTS LIST

FINISH MACHINED SURFACES 125 UNLESS OTHERWISE NOTED
DEBURR & BREAK ALL SHARP EDGES

DO NOT SCALE DRAWING

DIM & TOL PER ASME Y14.5. UNLESS OTHERWISE SPECIFIED DIMENSIONS ARE IN INCHES
TOLERANCES ARE:
FRACTIONS ± N/A
DECIMAL .X ± .1 .XX ± .01 .XXX ± .005
ANGLES ± .50°

THIRD ANGLE PROJECTION

TRACKING NO.
N/A

APPROVALS	DATE
DRAWN C L HUTTON	05JUN12
CHECKED	
APPROVED	
APPROVED	

United States Department of Energy
Jefferson Lab
Thomas Jefferson National Accelerator Facility
Newport News Virginia

HALL D - GLUEX
TEST SETUP
TIME OF FLIGHT
MINI TOF LIGHT GUIDE HOLDER ASSY

SIZE D | DWG. NO. D00000-13-05-1001 | REV. –

SCALE 1 : 1 | USED ON ASSY NO. D00000-13-05-0000 | SHEET 1 OF 1